Date	SYM	REVISION RECORD	AUTH	DR.	CK.
11/15/03	A	CORRECTED FUSE SIZE	T.B.	B.S.	

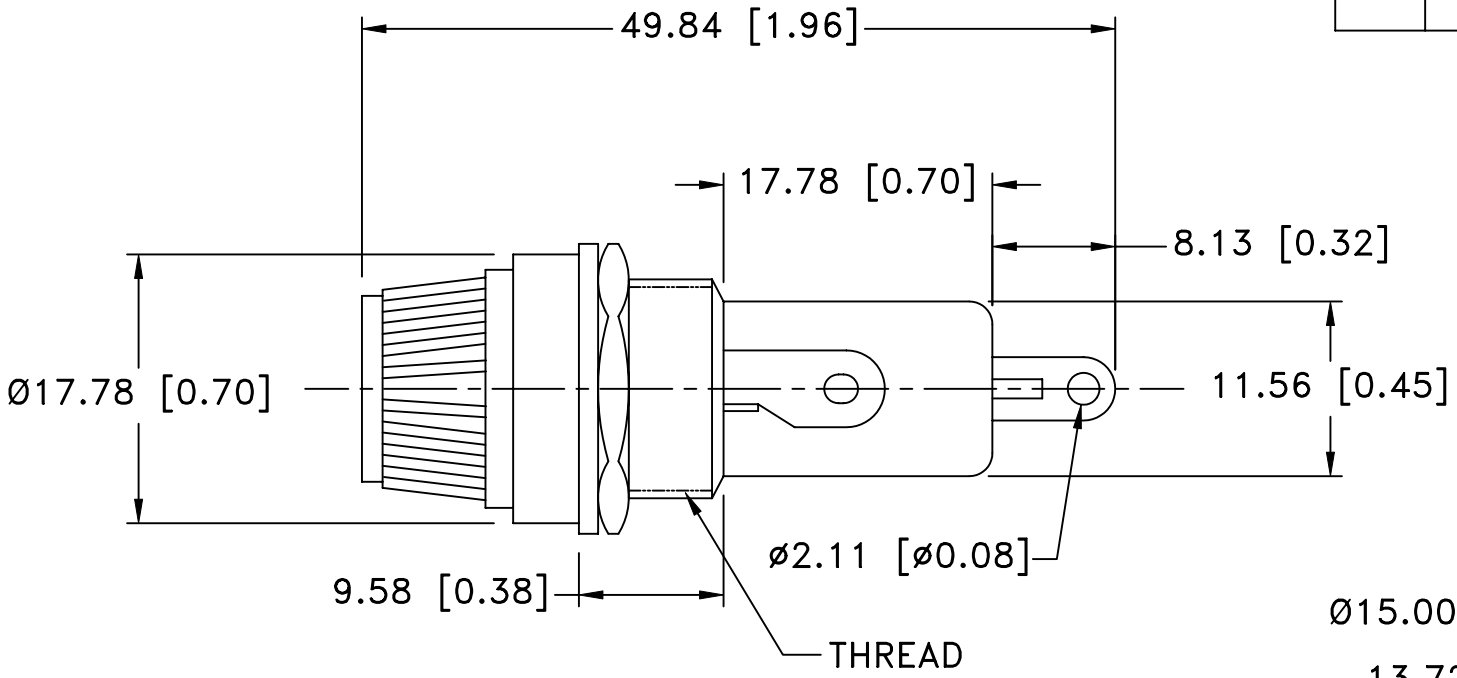

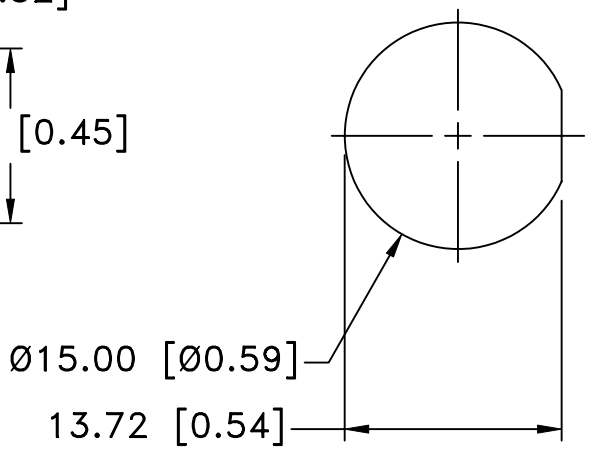

MOUNTING HOLE

NOTES:

1. MATERIAL:
   HOUSING : BLACK BAKELITE TYPE.
   250V, 10A
   FUSE: FITS Ø6.35X32mm

Tolerance (Except as noted)	Memory Protection Devices, Inc 200 Broad Hollow Road, Farmingdale, New York 11735		
decimal ±.5 (.020)		Scale	Drawn By B.S. Approved By T.B.
Fractional ± .8 (.030)	Title FUSE HOLDER		
Angular ± 3°	Date 11/15/03	Drawing Number ZB3210	